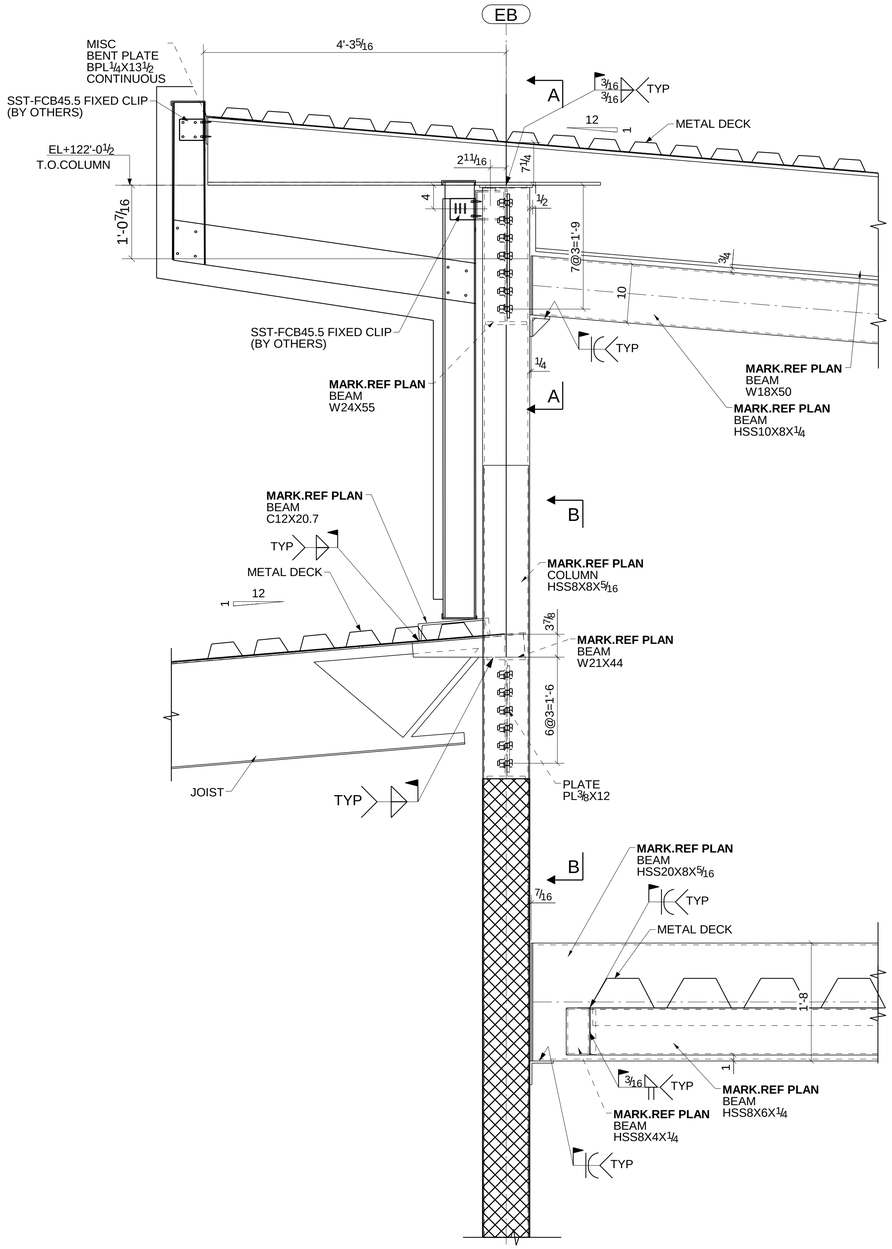

32 SECTION
REF DWG.NO.(17/S44.7)

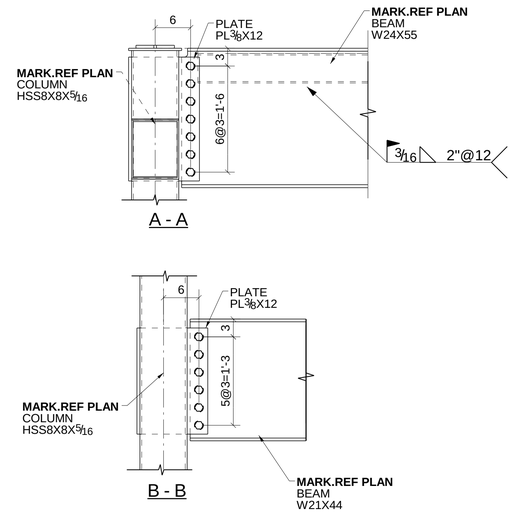

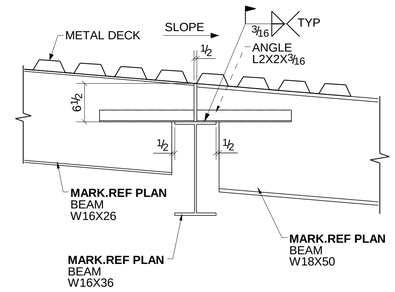

34 SECTION
REF DWG.NO.(5/S44.7)

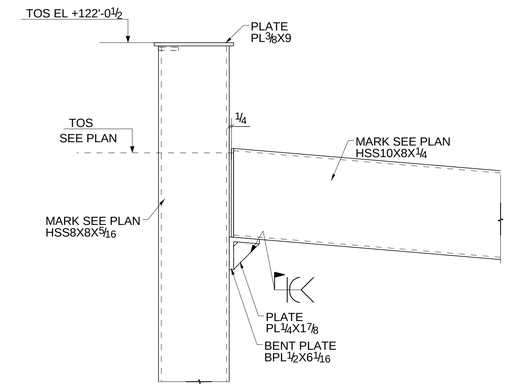

35 SECTION

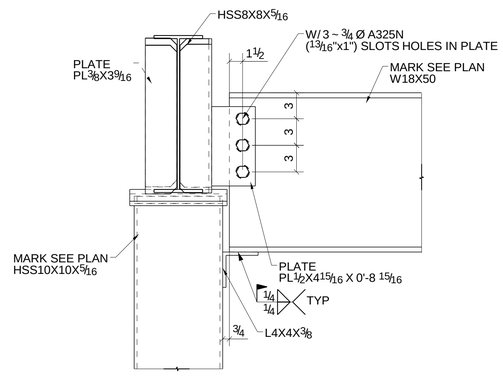

36 SECTION

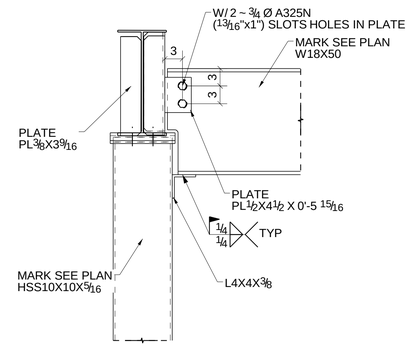

36A SECTION

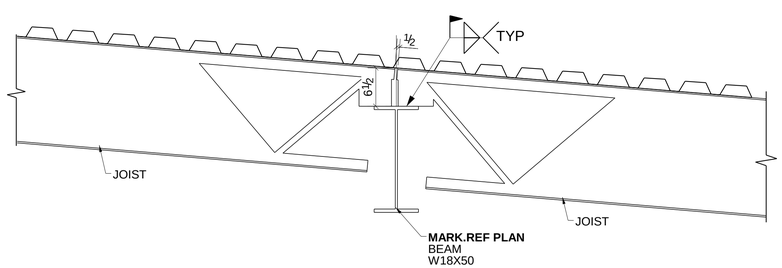

33 SECTION
REF DWG.NO.(6/S44.7)