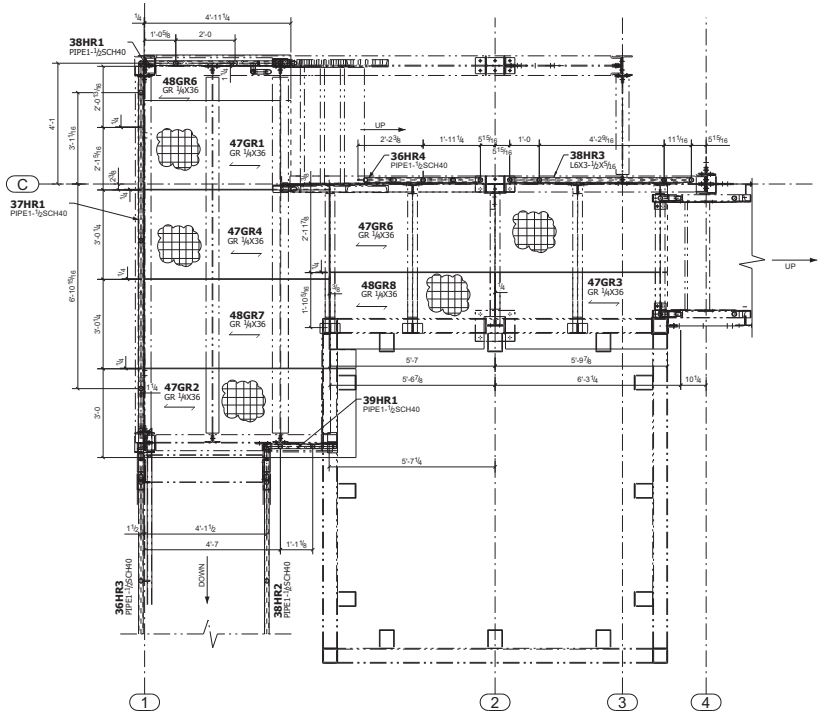

LOWER PLATFORM PLAN
T.O. GRATING EL. 8'-9¾

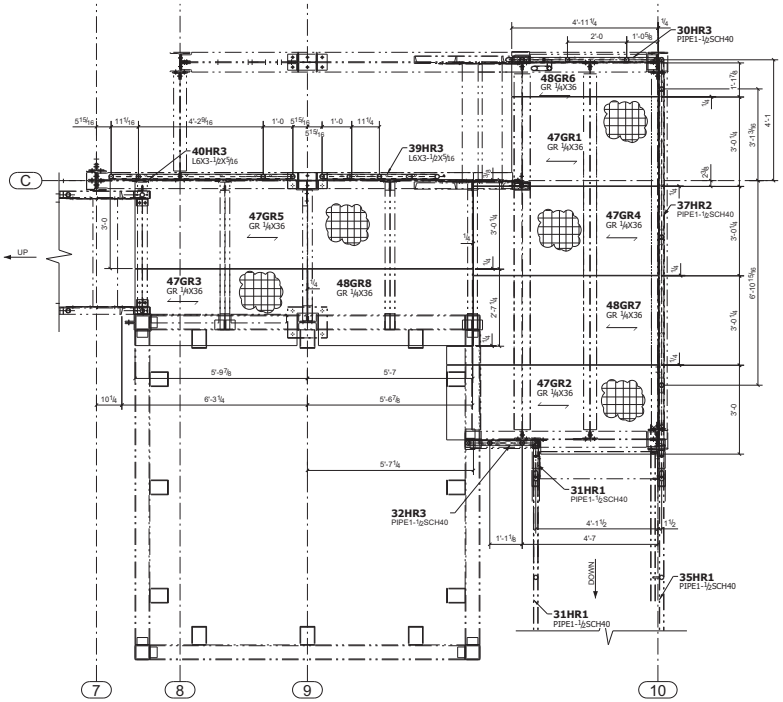

LOWER PLATFORM PLAN
T.O. GRATING EL. 8'-9¾

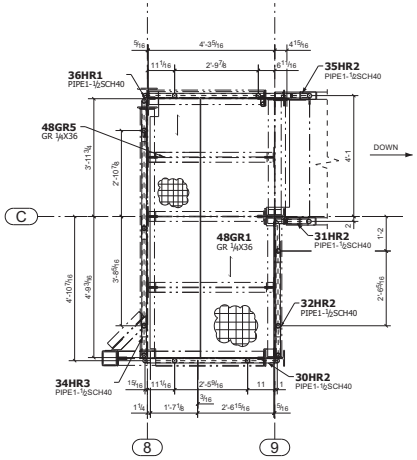

UPPER PLATFORM PLAN
T.O. GRATING EL.15'-11¾

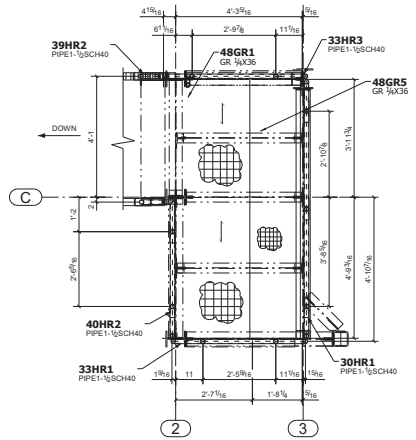

UPPER PLATFORM PLAN
T.O. GRATING EL.15'-11¾

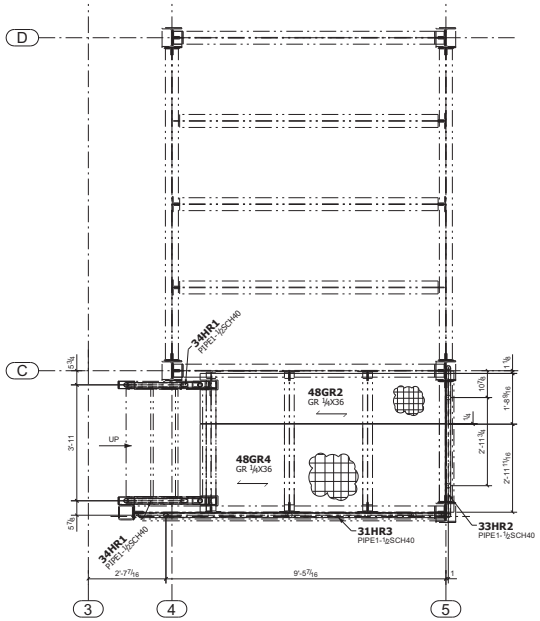

CONTROLROOM PLATFORM PLAN
T.O. GRATING EL.11'-3¾

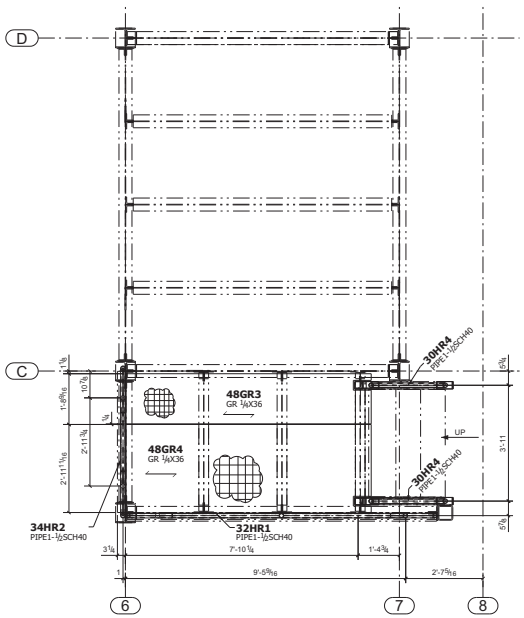

CONTROLROOM PLATFORM PLAN
T.O. GRATING EL.11'-3¾

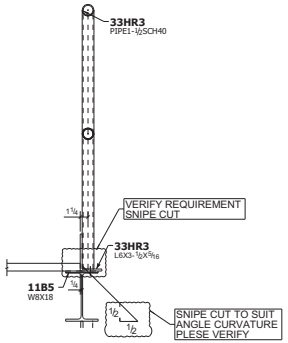

(TYPICAL BEAM TO HANDRAIL
CONNECTION DETAIL)

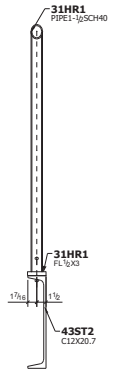

(TYPICAL STRINGER TO HANDRAIL
CONNECTION DETAIL)

HANDRAIL PIPES ARE A53 GR.B

HANDRAIL FIXING BOLTS ARE 1/2 Ø A325N
GRATINGS ARE TYPE 19-W-2 LIGHT DUTY

REV.NO	DATE	DESCRIPTION	BY
A	10/23/13	ISSUED FOR APPROVAL	VBM

UNLESS NOTED OTHERWISE
WELDS : E70XX1/4" FILLET
BOLTS : 3/4" A-325N
HOLES : 13/16"